Quad-Band GSM/GPRS RF Subsystem With DCR™ Transceiver

Part numbers link to product information

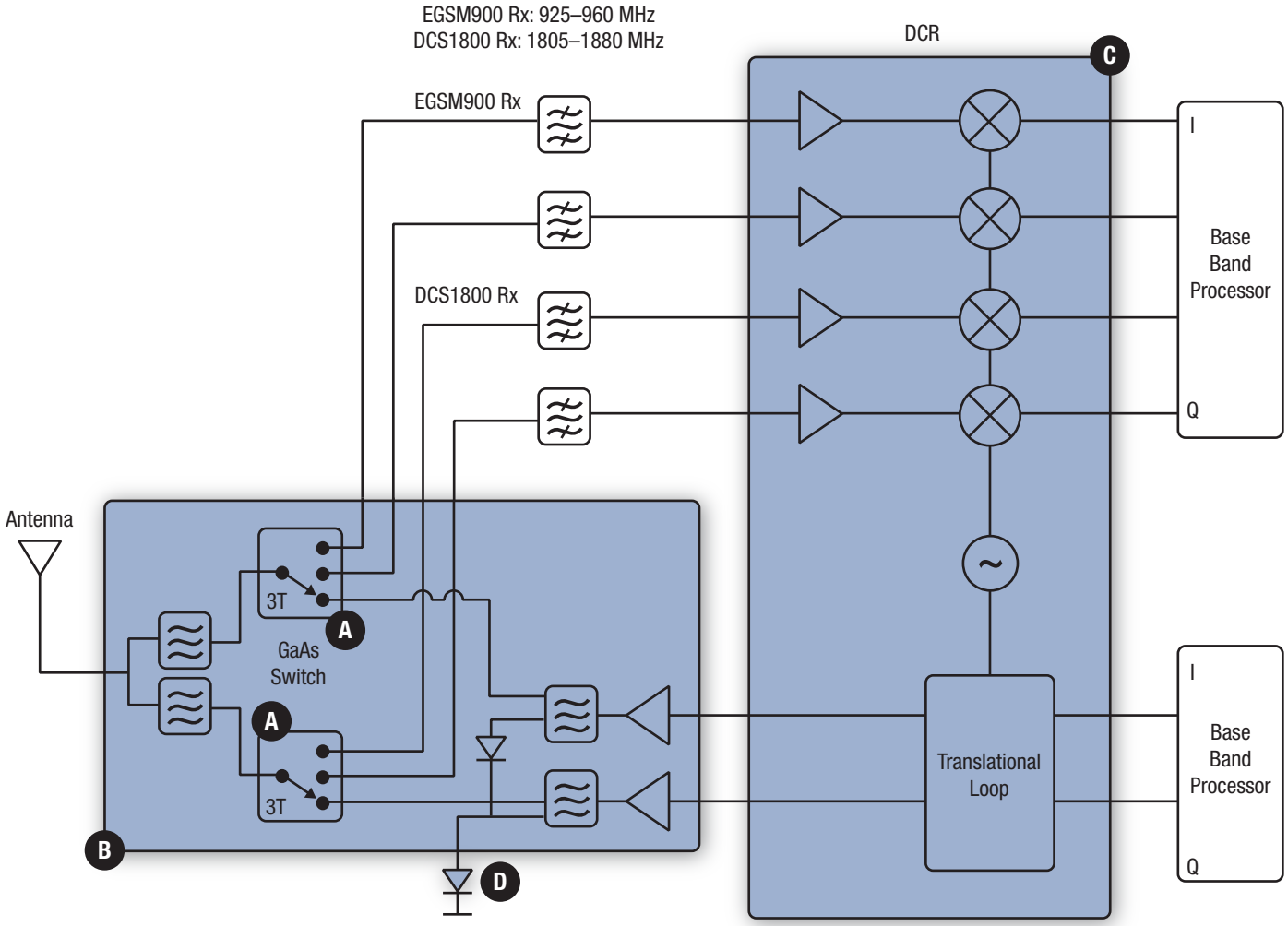

Switches

A SKY13270-92LF
SKY13309-370LF
SKY13306-313LF
SKY13268-344LF

Transmitter Module

B SKY77500
CX74063

DCR

C SKY74963

Schottky Diode

D SMS3923-015LF